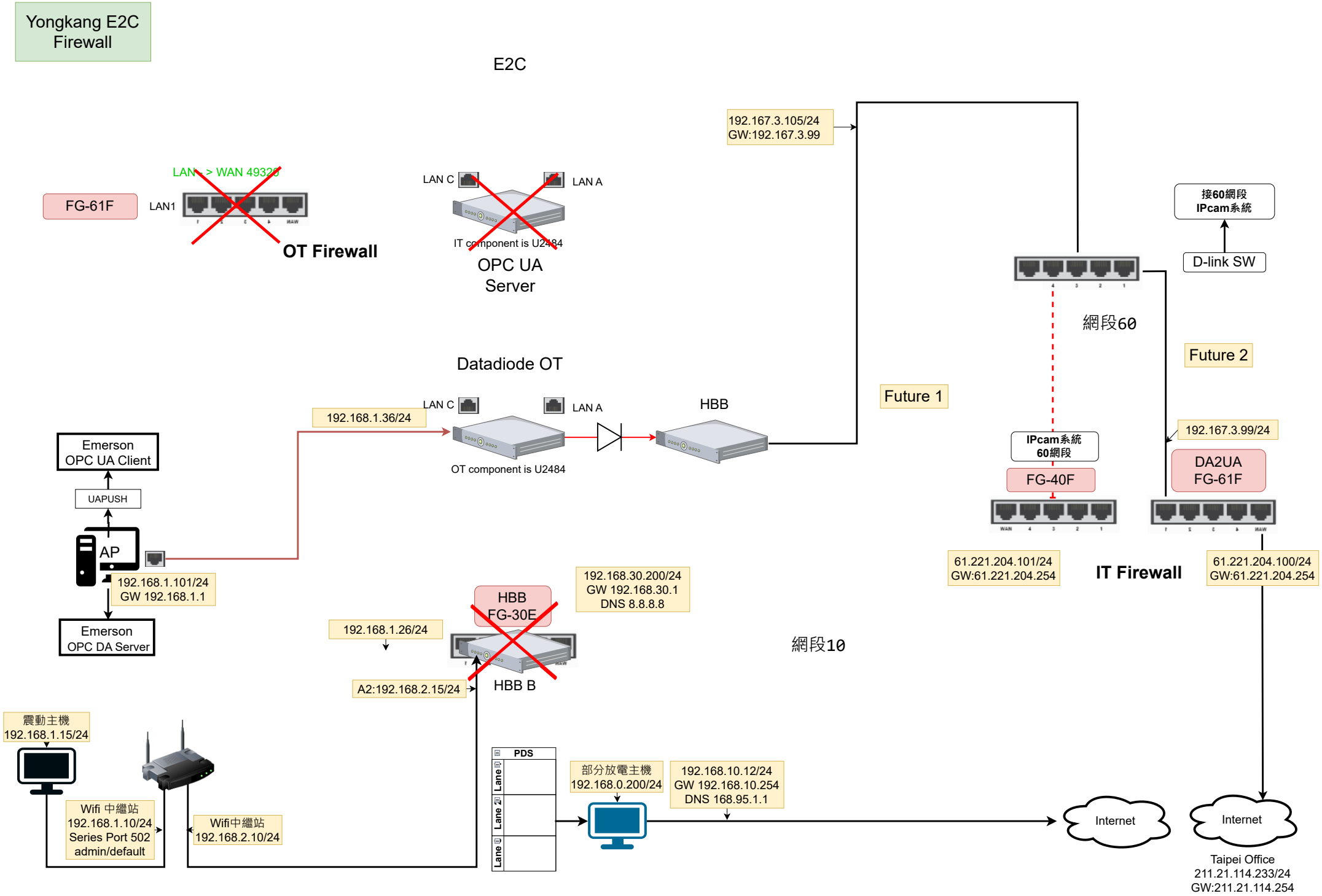
Yongkang E2C Firewall
E2C
FG-61F
LAN1
LAN1 -> WAN 49320
OT Firewall
LAN C
LAN A
IT component is U2484
OPC UA Server
192.167.3.105/24
GW:192.167.3.99
接60網段
IPcam系統
D-link SW
網段60
Future 2
Datadiode OT
LAN C
LAN A
HBB
192.168.1.36/24
OT component is U2484
Future 1
192.167.3.99/24
IPcam系統
60網段
FG-40F
DA2UA
FG-61F
Emerson
OPC UA Client
UAPUSH
AP
192.168.1.101/24
GW 192.168.1.1
Emerson
OPC DA Server
61.221.204.101/24
GW:61.221.204.254
IT Firewall
61.221.204.100/24
GW:61.221.204.254
192.168.30.200/24
GW 192.168.30.1
DNS 8.8.8.8
HBB
FG-30E
192.168.1.26/24
網段10
A2:192.168.2.15/24
HBB B
震動主機
192.168.1.15/24
PDS
Lane 1
Lane 2
Lane 3
部分放電主機
192.168.0.200/24
192.168.10.12/24
GW 192.168.10.254
DNS 168.95.1.1
Wifi 中繼站
192.168.1.10/24
Series Port 502
admin/default
Wifi中繼站
192.168.2.10/24
Internet
Internet
Taipei Office
211.21.114.233/24
GW:211.21.114.254